FB20_ClassifyTrack [FB2]

FB20_ClassifyTrack Properties					
General					
Name	FB20_ClassifyTrack	**Number**	2	**Type**	FB
Language	LAD	**Numbering**	Automatic		
Information					
Title		**Author**		**Comment**	Core tracking logic: - Part detection via rising edge - Vision decoding - Class mapping - Circular buffer allocation (1–6) - Travel time simulation using TON - Arrival detection (level-based) - Single ejection interlock - Counting logic - Full system reset handling
Family		**Version**	0.1	**User-defined ID**	

Name	Data type	Default value	Retain	Accessible from HMI/OPC UA/Web API	Writable from HMI/OPC UA/Web API	Visible in HMI engineering	Setpoint	Supervision	Comment
Input									
bRun	Bool	false	Non-retain	True	True	True	False		
bFault	Bool	false	Non-retain	True	True	True	False		
iPartPresent	Bool	false	Non-retain	True	True	True	False		
iCamB0	Bool	false	Non-retain	True	True	True	False		
iCamB1	Bool	false	Non-retain	True	True	True	False		
iCamB2	Bool	false	Non-retain	True	True	True	False		
iCamB3	Bool	false	Non-retain	True	True	True	False		
iResetPB	Bool	false	Non-retain	True	True	True	False		
Output									
nClass	Int	0	Non-retain	True	True	True	False		
qPusherBlue	Bool	false	Non-retain	True	True	True	False		

Name	Data type	Default value	Retain	Accessible from HMI/OPC UA/Web API	Writable from HMI/OPC UA/Web API	Visible in HMI engineering	Setpoint	Supervision				Comment
qPusherGreen	Bool	false	Non-retain	True	True	True	False					
qPusherGrey	Bool	false	Non-retain	True	True	True	False					
nCountBlue	DInt	0	Non-retain	True	True	True	False					
nCountGreen	DInt	0	Non-retain	True	False	True	False					
nCountGrey	DInt	0	Non-retain	True	True	True	False					
nCountTrash	DInt	0	Non-retain	True	True	True	False					
InOut												
Static												
bSlotAllocated	Bool	false	Non-retain	True	True	True	False					
ftPart	F_TRIG			True	True	True	False					for detection of the incoming parts
Input												
CLK	Bool	false	Non-retain	True	True	True	False					
Output												
Q	Bool	false	Non-retain	True	True	True	False					
InOut												
Static												
Stat_Bit	Bool	false	Non-retain	True	True	True	False					
rtPart	R_TRIG			True	True	True	True					
Input												
CLK	Bool	false	Non-retain	True	True	True	False					
Output												
Q	Bool	false	Non-retain	True	True	True	False					
InOut												
Static												
Stat_Bit	Bool	false	Non-retain	True	True	True	False					
bPartDetected-Pulse	Bool	false	Non-retain	True	True	True	True					
nVisionCode	Int	0	Non-retain	True	True	True	False					for decoding the type of material coming

Name	Data type	Default value	Retain	Accessible from HMI/OPC UA/Web API	Writable from HMI/OPC UA/Web API	Visible in HMI engineering	Setpoint	Supervision				Comment
nPartClassNew	Int	0	Non-retain	True	True	True	False					
tTravelBlue	Time	T#2200ms	Non-retain	True	True	True	False					Timing Constants
tTravelGreen	Time	T#5600ms	Non-retain	True	True	True	False					
tTravelGrey	Time	T#9300ms	Non-retain	True	True	True	False					
tTravelTrash	Time	T#0ms	Non-retain	True	True	True	False					
tEjectPulseWidth	Time	T#800ms	Non-retain	True	True	True	False					
tTravelNew	Time	T#0ms	Non-retain	True	True	True	False					
bSlotActive	Array[1..6] of Bool		Non-retain	True	True	True	False					Slot Arrays
bSlotActive[1]	Bool	false	Non-retain	True	True	True	False					Slot Arrays
bSlotActive[2]	Bool	false	Non-retain	True	True	True	False					Slot Arrays
bSlotActive[3]	Bool	false	Non-retain	True	True	True	False					Slot Arrays
bSlotActive[4]	Bool	false	Non-retain	True	True	True	False					Slot Arrays
bSlotActive[5]	Bool	false	Non-retain	True	True	True	False					Slot Arrays
bSlotActive[6]	Bool	false	Non-retain	True	True	True	False					Slot Arrays
nSlotClass	Array[1..6] of Int		Non-retain	True	True	True	False					
nSlotClass[1]	Int	0	Non-retain	True	True	True	False					
nSlotClass[2]	Int	0	Non-retain	True	True	True	False					
nSlotClass[3]	Int	0	Non-retain	True	True	True	False					
nSlotClass[4]	Int	0	Non-retain	True	True	True	False					
nSlotClass[5]	Int	0	Non-retain	True	True	True	False					
nSlotClass[6]	Int	0	Non-retain	True	True	True	False					
tSlotPreset	Array[1..6] of Time		Non-retain	True	True	True	False					
tSlotPreset[1]	Time	T#0ms	Non-retain	True	True	True	False					
tSlotPreset[2]	Time	T#0ms	Non-retain	True	True	True	False					
tSlotPreset[3]	Time	T#0ms	Non-retain	True	True	True	False					

Name	Data type	Default value	Retain	Accessible from HMI/OPC UA/Web API	Writable from HMI/OPC UA/Web API	Visible in HMI engineering	Setpoint	Supervision	Comment
tSlotPreset[4]	Time	T#0ms	Non-retain	True	True	True	False		
tSlotPreset[5]	Time	T#0ms	Non-retain	True	True	True	False		
tSlotPreset[6]	Time	T#0ms	Non-retain	True	True	True	False		
tonTravel	Array[1..6] of TON_TIME		Non-retain	True	True	True	False		
tonTravel[1]	TON_TIME		Non-retain	True	True	True	False		
PT	Time	T#0ms	Non-retain	True	True	True	False		
ET	Time	T#0ms	Non-retain	True	False	True	False		
IN	Bool	false	Non-retain	True	True	True	False		
Q	Bool	false	Non-retain	True	False	True	False		
tonTravel[2]	TON_TIME		Non-retain	True	True	True	False		
PT	Time	T#0ms	Non-retain	True	True	True	False		
ET	Time	T#0ms	Non-retain	True	False	True	False		
IN	Bool	false	Non-retain	True	True	True	False		
Q	Bool	false	Non-retain	True	False	True	False		
tonTravel[3]	TON_TIME		Non-retain	True	True	True	False		
PT	Time	T#0ms	Non-retain	True	True	True	False		
ET	Time	T#0ms	Non-retain	True	False	True	False		
IN	Bool	false	Non-retain	True	True	True	False		
Q	Bool	false	Non-retain	True	False	True	False		
tonTravel[4]	TON_TIME		Non-retain	True	True	True	False		
PT	Time	T#0ms	Non-retain	True	True	True	False		
ET	Time	T#0ms	Non-retain	True	False	True	False		
IN	Bool	false	Non-retain	True	True	True	False		
Q	Bool	false	Non-retain	True	False	True	False		

Name	Data type	Default value	Retain	Accessible from HMI/OPC UA/Web API	Writable from HMI/OPC UA/Web API	Visible in HMI engineering	Setpoint	Supervision	Comment
tonTravel[5]	TON_TIME		Non-retain	True	True	True	False		
PT	Time	T#0ms	Non-retain	True	True	True	False		
ET	Time	T#0ms	Non-retain	True	False	True	False		
IN	Bool	false	Non-retain	True	True	True	False		
Q	Bool	false	Non-retain	True	False	True	False		
tonTravel[6]	TON_TIME		Non-retain	True	True	True	False		
PT	Time	T#0ms	Non-retain	True	True	True	False		
ET	Time	T#0ms	Non-retain	True	False	True	False		
IN	Bool	false	Non-retain	True	True	True	False		
Q	Bool	false	Non-retain	True	False	True	False		
rtArr	Array[1..6] of R_TRIG			True	True	True	False		
rtArr[1]	R_TRIG			True	True	True	False		
Input									
CLK	Bool	false	Non-retain	True	True	True	False		
Output									
Q	Bool	false	Non-retain	True	True	True	False		
InOut									
Static									
Stat_Bit	Bool	false	Non-retain	True	True	True	False		
rtArr[2]	R_TRIG			True	True	True	False		
Input									
CLK	Bool	false	Non-retain	True	True	True	False		
Output									
Q	Bool	false	Non-retain	True	True	True	False		
InOut									
Static									
Stat_Bit	Bool	false	Non-retain	True	True	True	False		

Name	Data type	Default value	Retain	Accessible from HMI/OPC UA/Web API	Writable from HMI/OPC UA/Web API	Visible in HMI engineering	Setpoint	Supervision	Comment
rtArr[3]	R_TRIG			True	True	True	False		
Input									
CLK	Bool	false	Non-retain	True	True	True	False		
Output									
Q	Bool	false	Non-retain	True	True	True	False		
InOut									
Static									
Stat_Bit	Bool	false	Non-retain	True	True	True	False		
rtArr[4]	R_TRIG			True	True	True	False		
Input									
CLK	Bool	false	Non-retain	True	True	True	False		
Output									
Q	Bool	false	Non-retain	True	True	True	False		
InOut									
Static									
Stat_Bit	Bool	false	Non-retain	True	True	True	False		
rtArr[5]	R_TRIG			True	True	True	False		
Input									
CLK	Bool	false	Non-retain	True	True	True	False		
Output									
Q	Bool	false	Non-retain	True	True	True	False		
InOut									
Static									
Stat_Bit	Bool	false	Non-retain	True	True	True	False		
rtArr[6]	R_TRIG			True	True	True	False		
Input									
CLK	Bool	false	Non-retain	True	True	True	False		
Output									
Q	Bool	false	Non-retain	True	True	True	False		

Name	Data type	Default value	Retain	Accessible from HMI/OPC UA/Web API	Writable from HMI/OPC UA/Web API	Visible in HMI engineering	Setpoint	Supervision				Comment
InOut												
Static												
Stat_Bit	Bool	false	Non-retain	True	True	True	False					
bArrive	Array[1..6] of Bool		Non-retain	True	True	True	False					
bArrive[1]	Bool	false	Non-retain	True	True	True	False					
bArrive[2]	Bool	false	Non-retain	True	True	True	False					
bArrive[3]	Bool	false	Non-retain	True	True	True	False					
bArrive[4]	Bool	false	Non-retain	True	True	True	False					
bArrive[5]	Bool	false	Non-retain	True	True	True	False					
bArrive[6]	Bool	false	Non-retain	True	True	True	False					
bEjectBusy	Bool	false	Non-retain	True	True	True	False					Fire / eject handling
nPartClassFire	Int	0	Non-retain	True	True	True	False					
tpEject	TP_TIME		Non-retain	True	True	True	False					
PT	Time	T#0ms	Non-retain	True	True	True	False					
ET	Time	T#0ms	Non-retain	True	False	True	False					
IN	Bool	false	Non-retain	True	True	True	False					
Q	Bool	false	Non-retain	True	False	True	False					
bCountPulse	Bool	false	Non-retain	True	True	True	True					
rtCount	R_TRIG			True	True	True	False					
Input												
CLK	Bool	false	Non-retain	True	True	True	False					
Output												
Q	Bool	false	Non-retain	True	True	True	False					
InOut												
Static												
Stat_Bit	Bool	false	Non-retain	True	True	True	False					
ftEject	F_TRIG			True	True	True	True					

Name	Data type	Default value	Retain	Accessible from HMI/OPC UA/Web API	Writable from HMI/OPC UA/Web API	Visible in HMI engineering	Setpoint	Supervision	Comment
Input									
CLK	Bool	false	Non-retain	True	True	True	False		
Output									
Q	Bool	false	Non-retain	True	True	True	False		
InOut									
Static									
Stat_Bit	Bool	false	Non-retain	True	True	True	False		
rtCountPulse	R_TRIG			True	True	True	True		
Input									
CLK	Bool	false	Non-retain	True	True	True	False		
Output									
Q	Bool	false	Non-retain	True	True	True	False		
InOut									
Static									
Stat_Bit	Bool	false	Non-retain	True	True	True	False		
t0	Int	0	Non-retain	True	True	True	False		Enums to do mapping for class
t1	Int	0	Non-retain	True	True	True	False		
t2	Int	0	Non-retain	True	True	True	False		
t3	Int	0	Non-retain	True	True	True	False		
nWriteIdx	Int	1	Non-retain	True	True	True	False		For queue management
nSlots	Int	6	Non-retain	True	True	True	False		
bQueueFull	Bool	false	Non-retain	True	True	True	False		
rtFactoryStart	R_TRIG			True	True	True	False		
Input									
CLK	Bool	false	Non-retain	True	True	True	False		
Output									
Q	Bool	false	Non-retain	True	True	True	False		
InOut									

Name	Data type	Default value	Retain	Accessible from HMI/OPC UA/Web API	Writable from HMI/OPC UA/Web API	Visible in HMI engineering	Set-point	Supervision	Comment
Static									
Stat_Bit	Bool	false	Non-retain	True	True	True	False		
bSystemReset	Bool	false	Non-retain	True	True	True	True		
Temp									
Constant									

Network 1: Creating a clean “new part” pulse

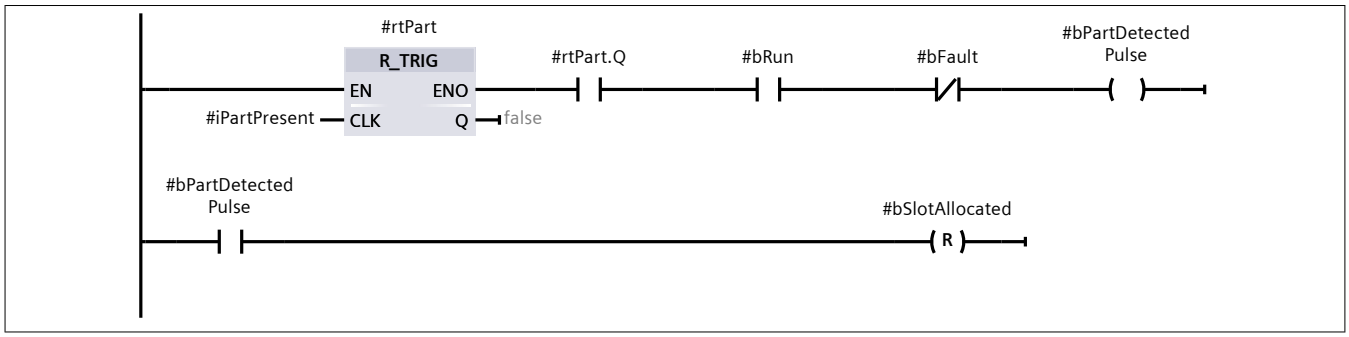

Network 2: Building vision code

Binary encoding of 4-bit vision sensor (0–15)

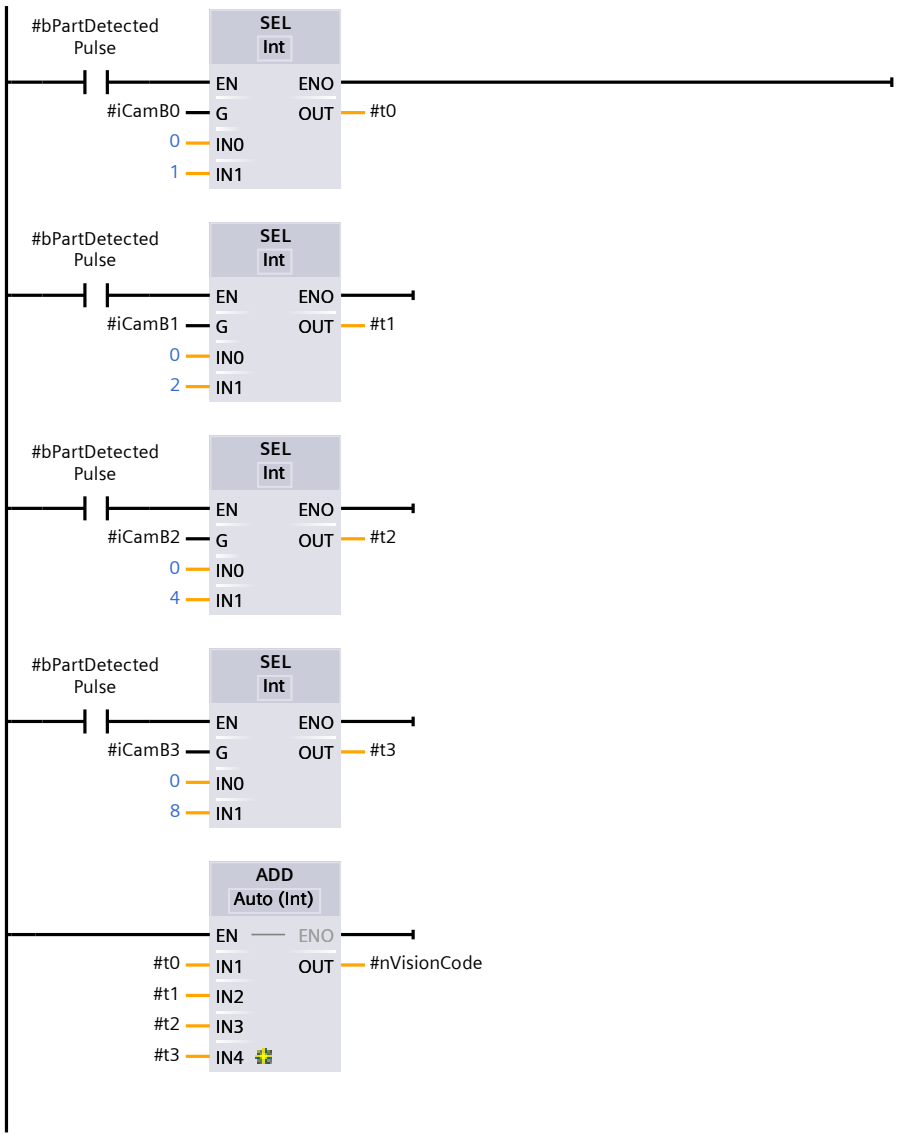

Network 3: Mapping vision code to class

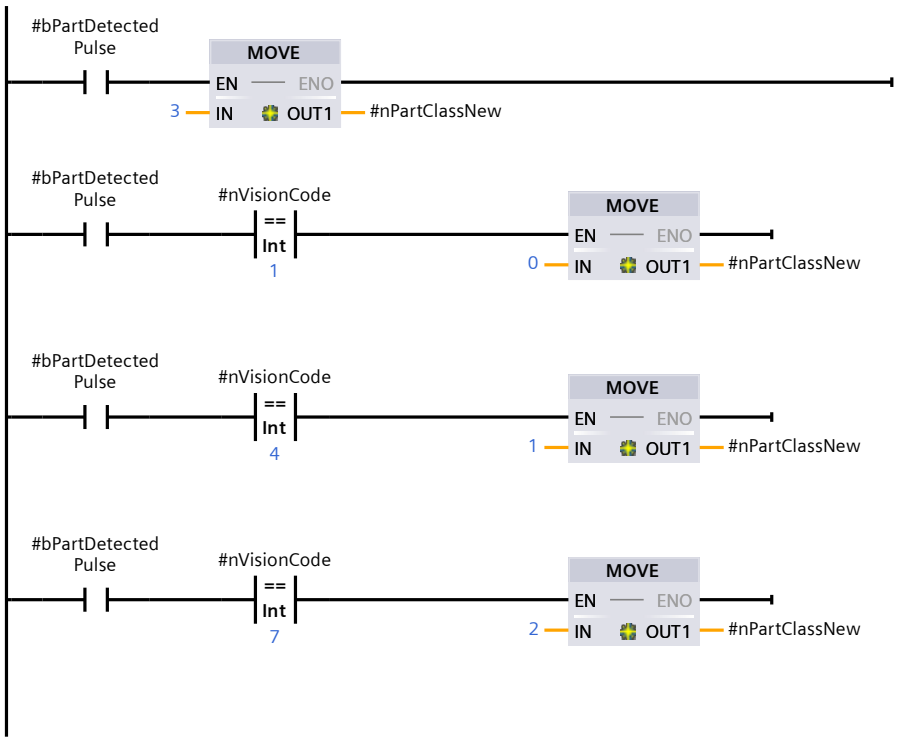

Network 4: Computing travel time for the new class

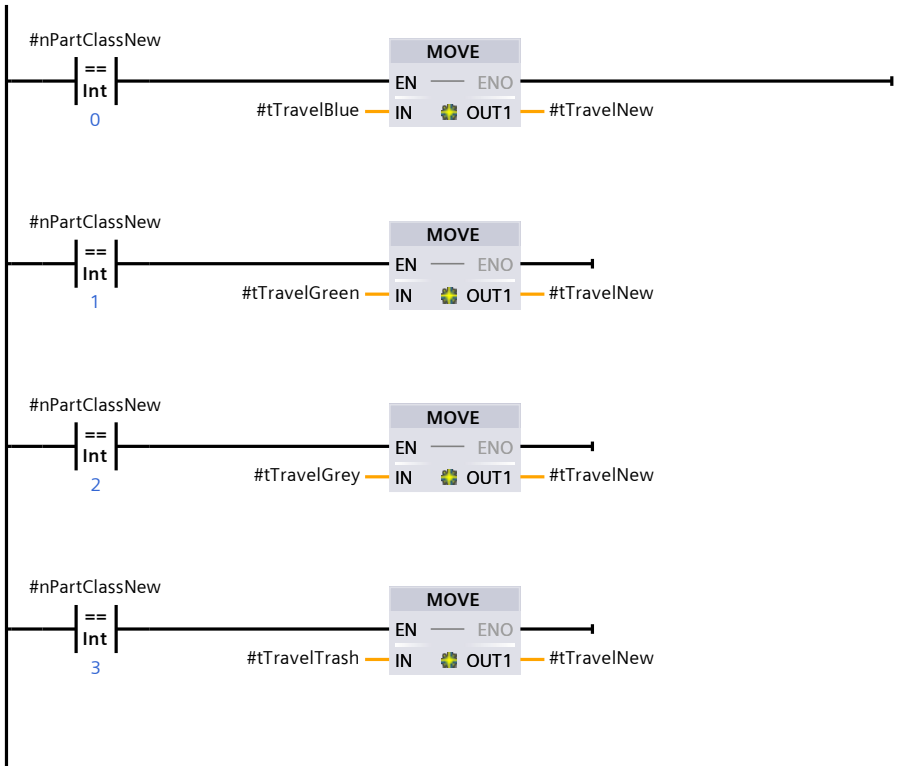

Network 5: Queue full check (on new part pulse)

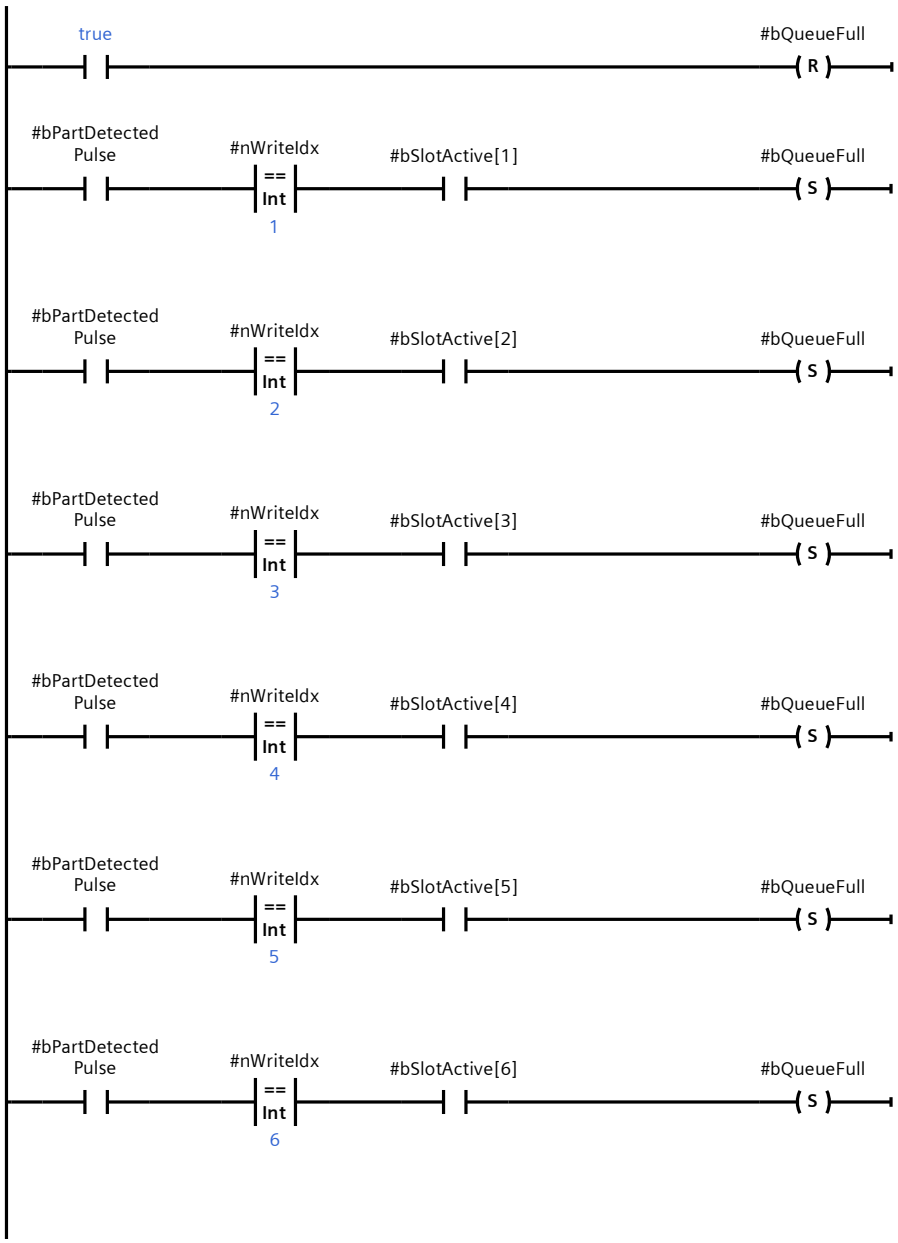

Network 6: Allocating the slots in order 1 to 6

Network 6: Allocating the slots in order 1 to 6 (1.1 / 5.1)

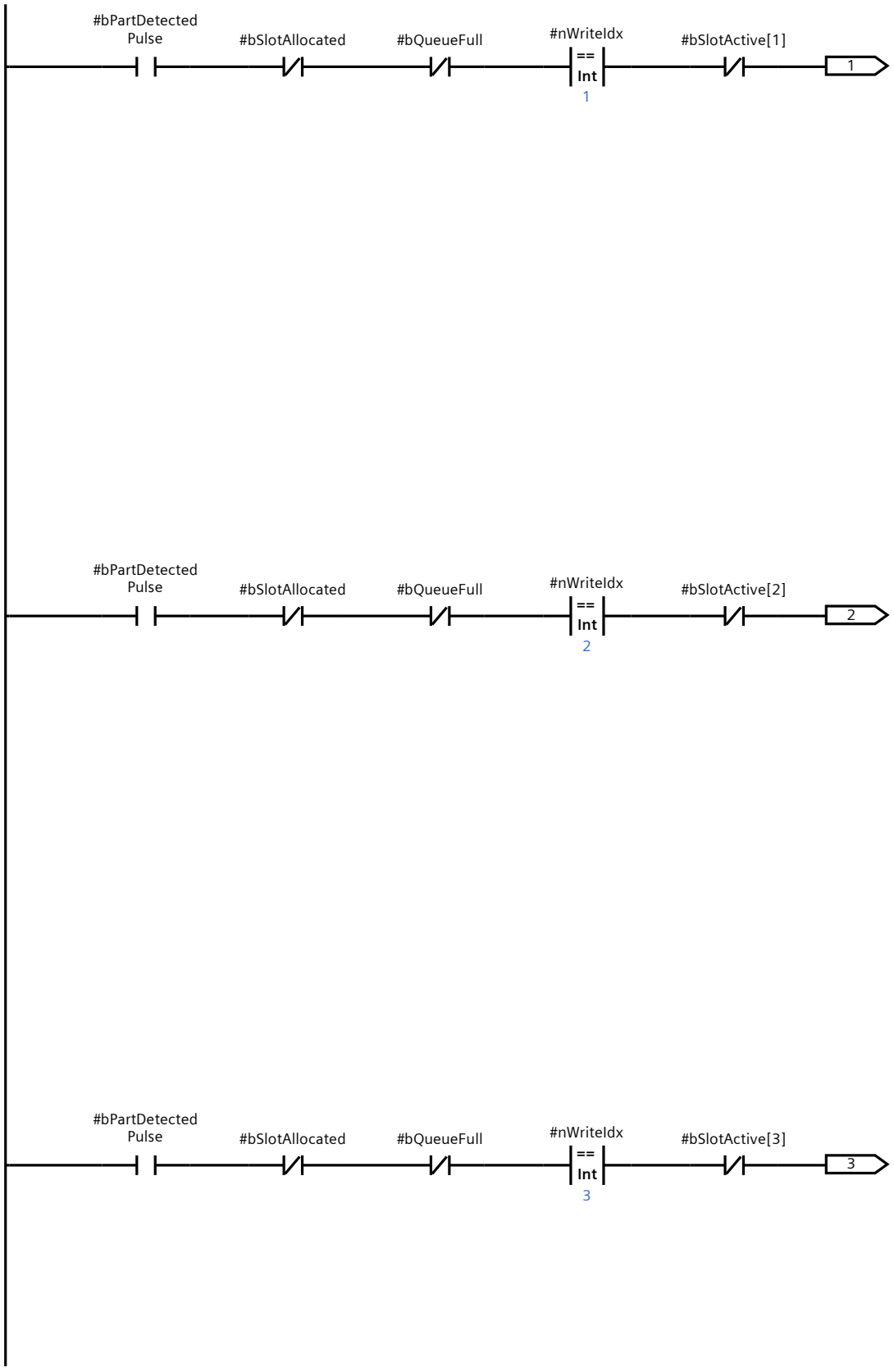

Network 6: Allocating the slots in order 1 to 6 (2.1 / 5.1)

1.1 (Page1 - 13)

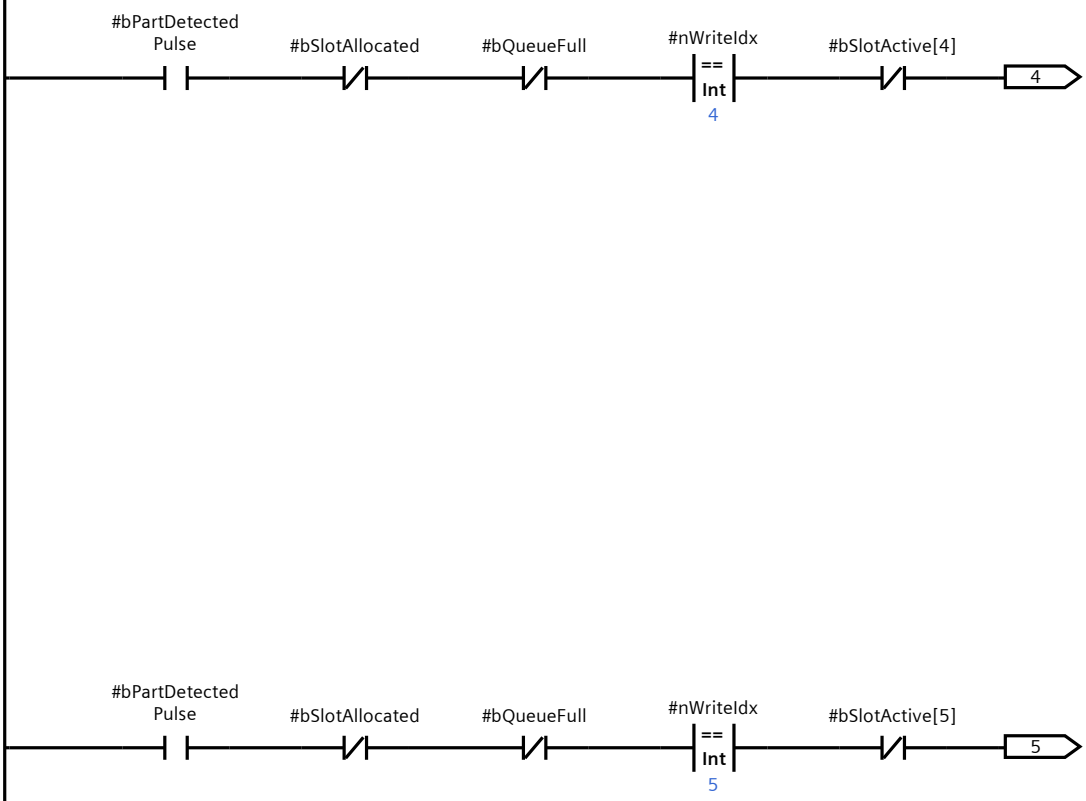

3.1 (Page1 - 15)

Network 6: Allocating the slots in order 1 to 6 (3.1 / 5.1)

2.1 (Page1 - 14)

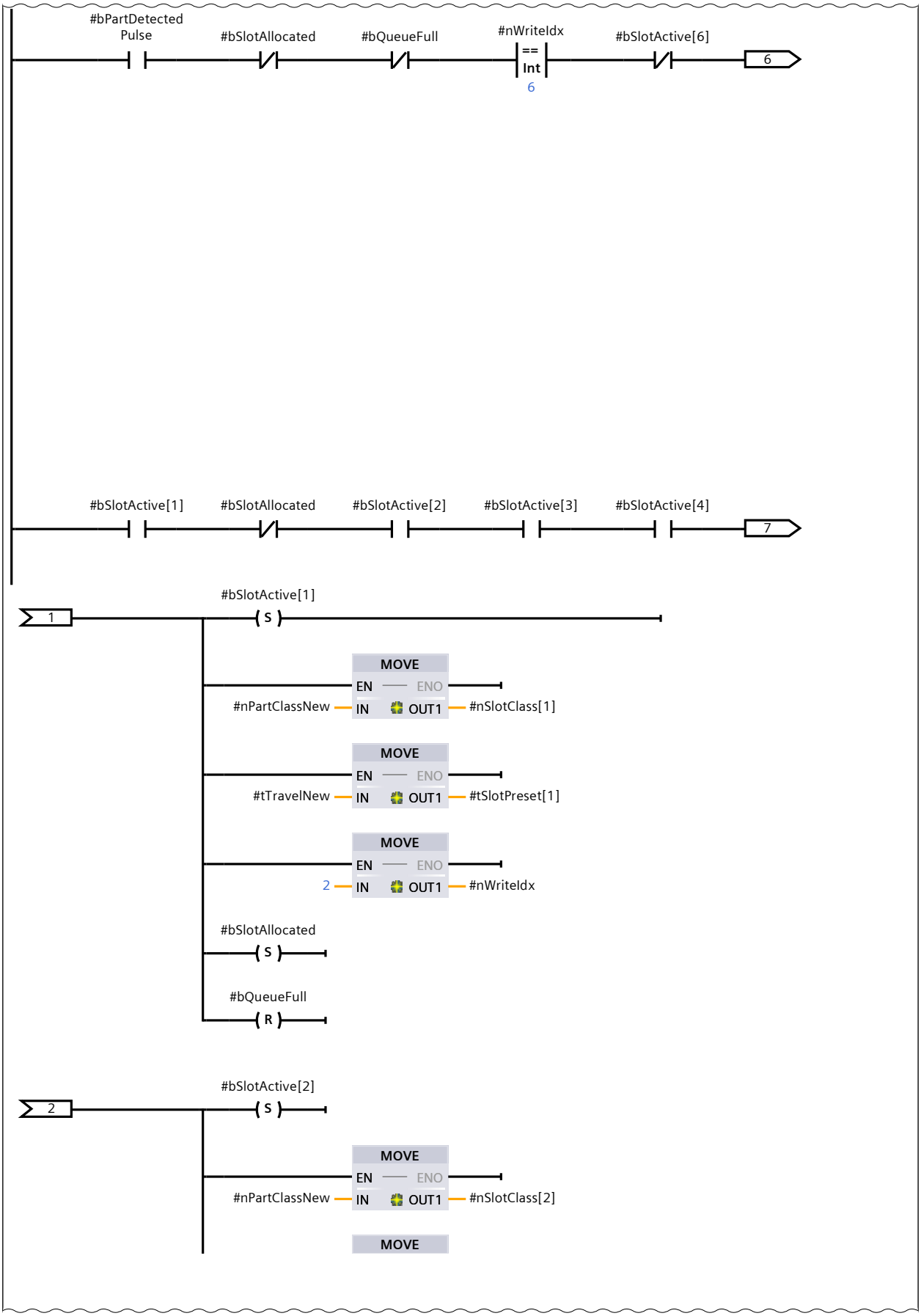

4.1 (Page1 - 16)

Network 6: Allocating the slots in order 1 to 6 (4.1 / 5.1)

3.1 (Page1 - 15)

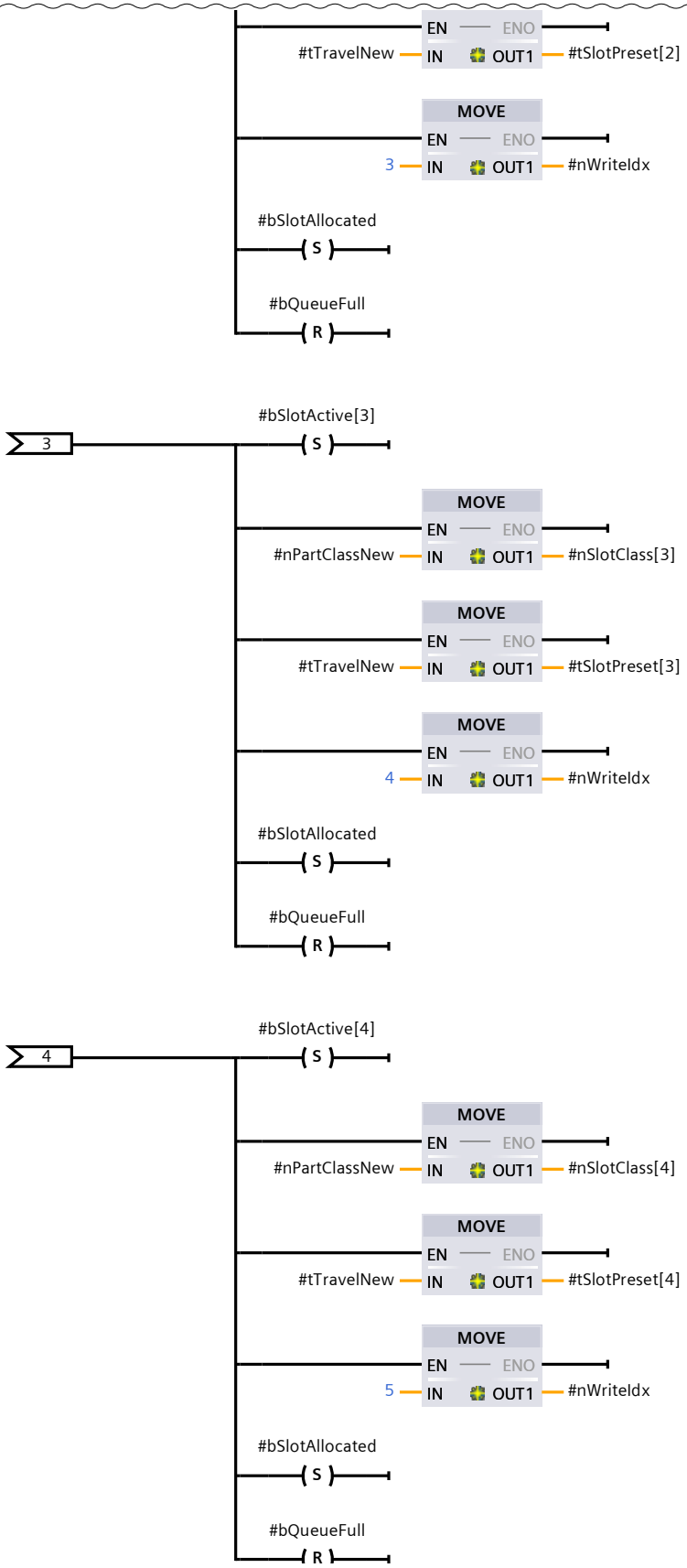

5.1 (Page1 - 17)

Network 6: Allocating the slots in order 1 to 6 (5.1 / 5.1)

4.1 (Page1 - 16)

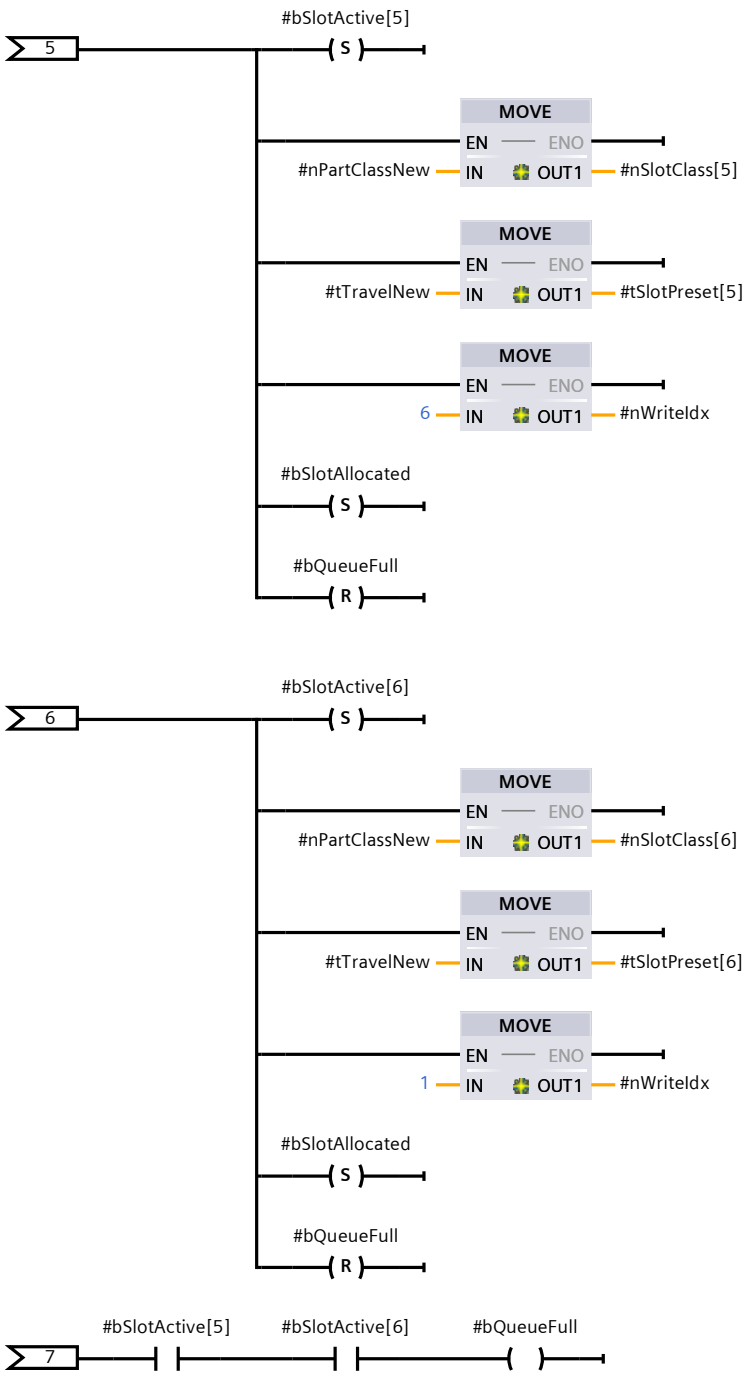

Network 7: Running travel timers per slot

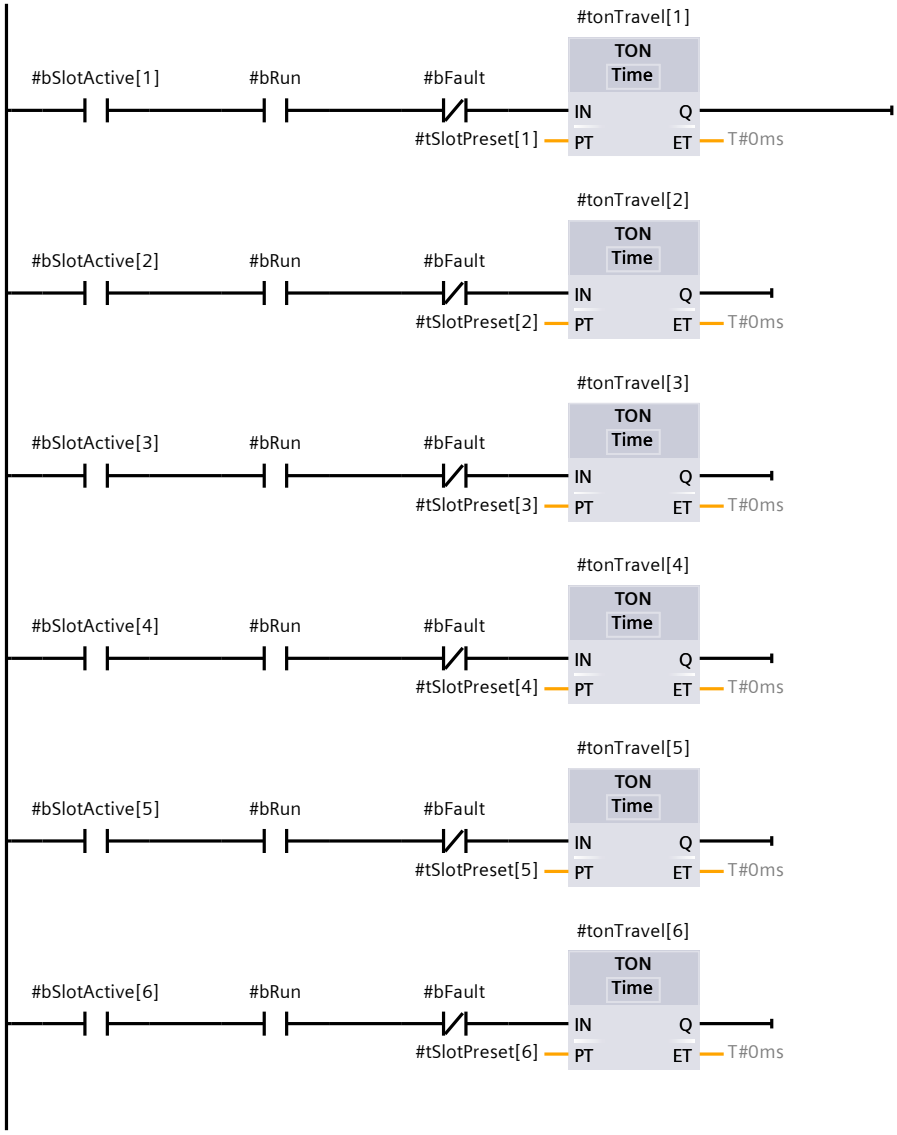

Network 8: Creating arrival pulse per slot

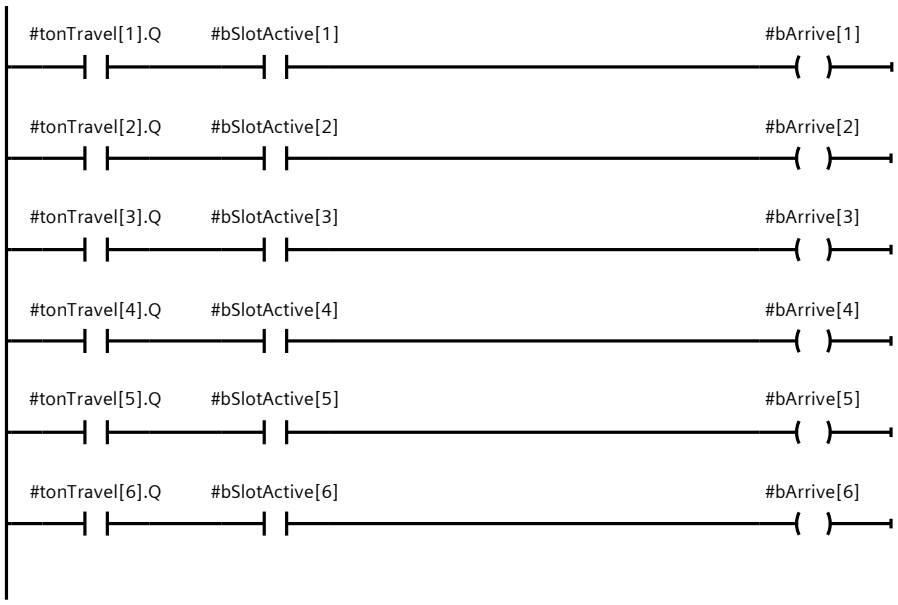

Network 9: Fire selection + free slot

Network 9: Fire selection + free slot (1.1 / 2.1)

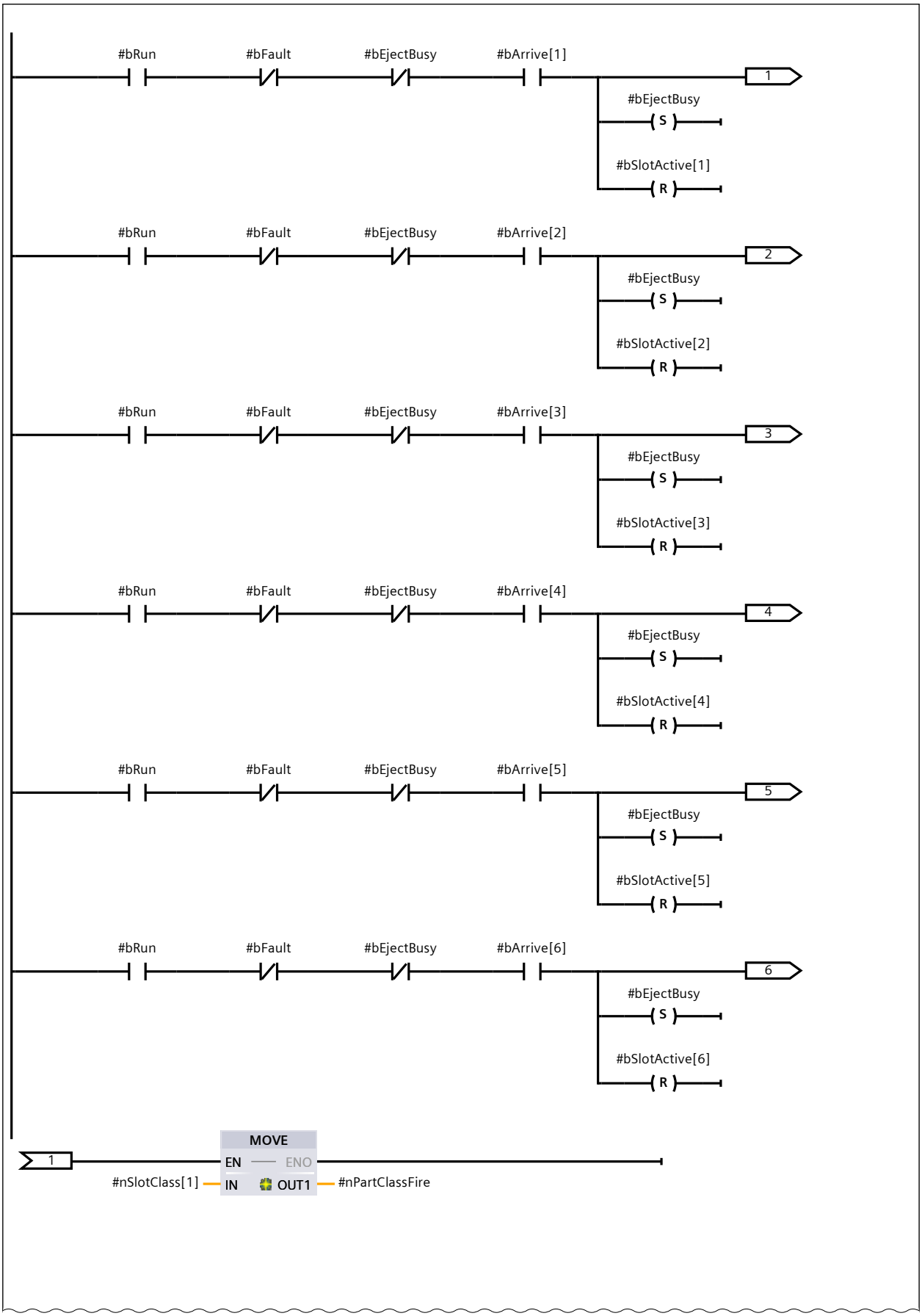

Network 9: Fire selection + free slot (2.1 / 2.1)

1.1 (Page1 - 20)

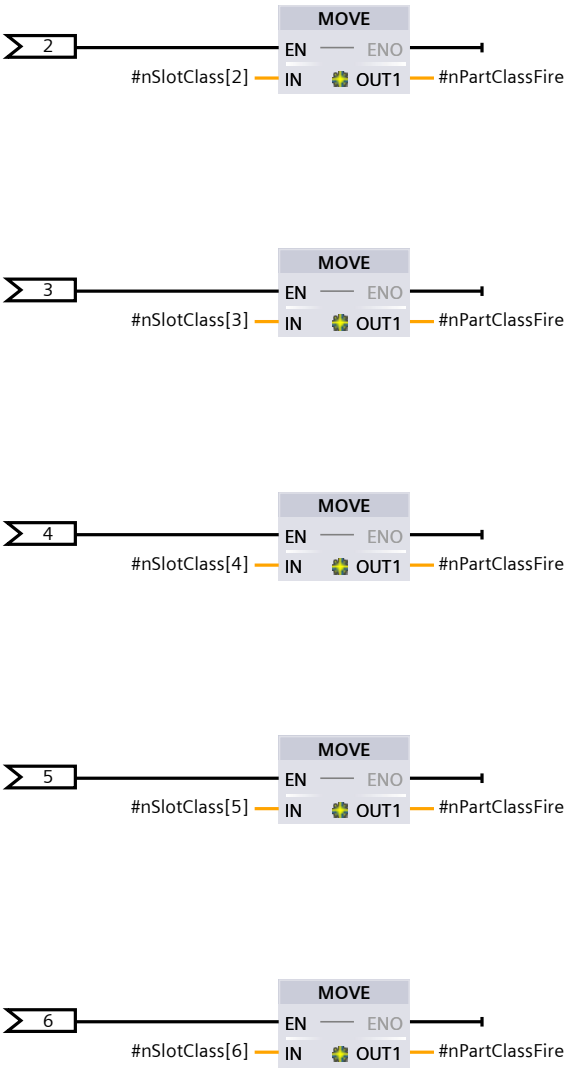

Network 10: Creating a real pusher pulse (TP)

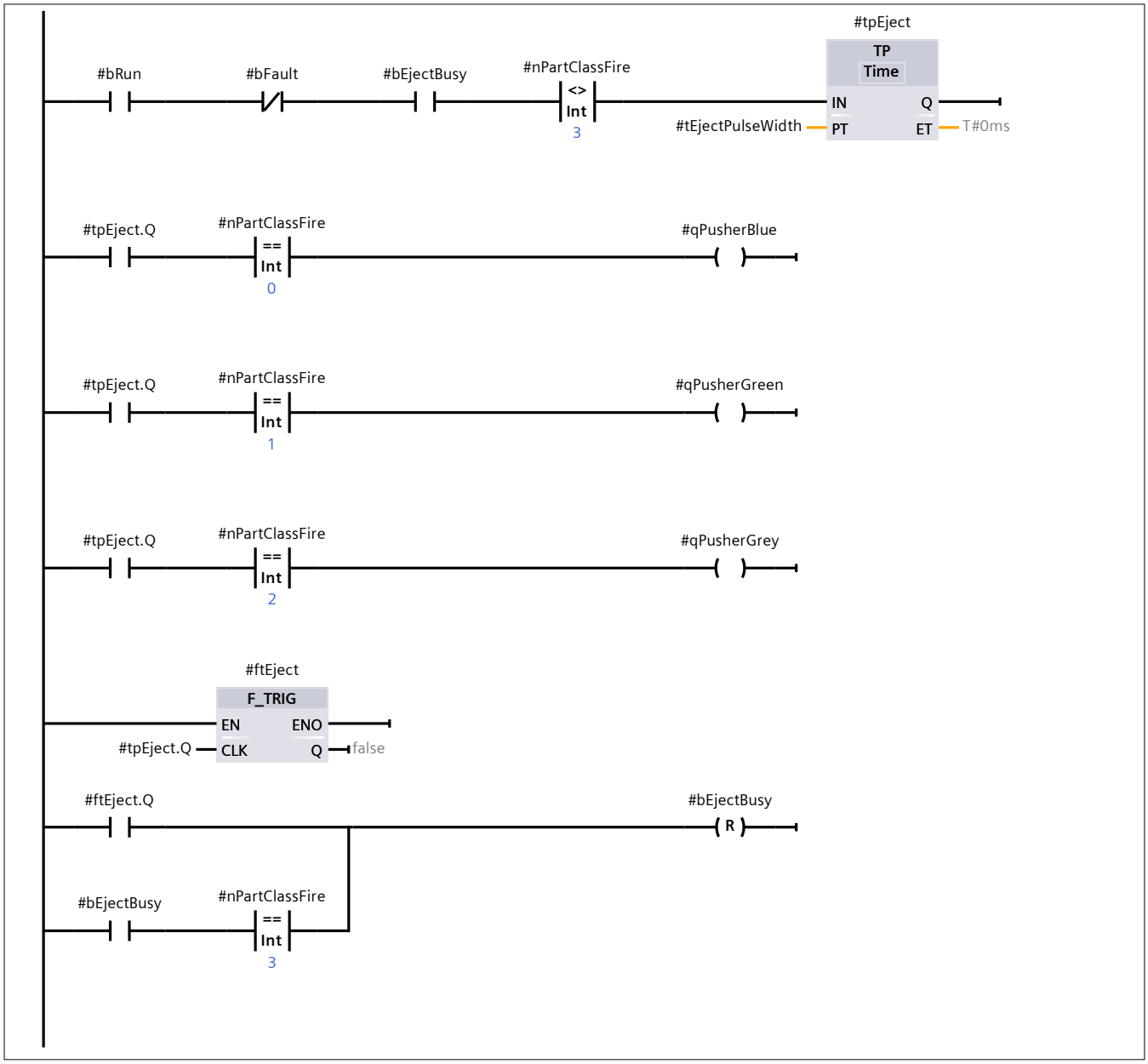

Network 11: Counting once per fired event

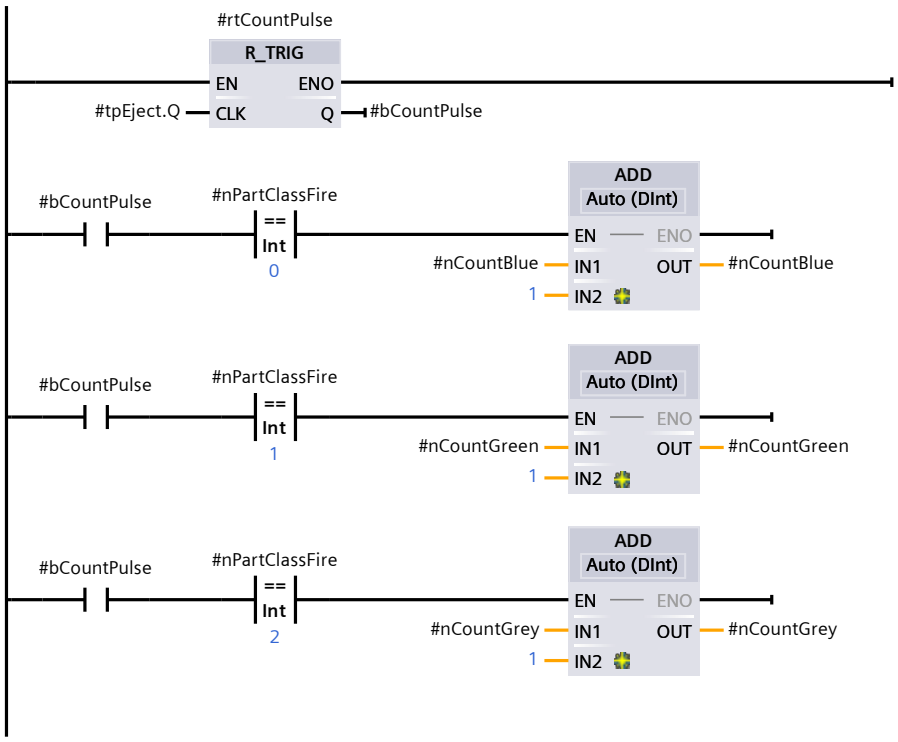

Network 12: Reset handling

Full system reset on Factory restart or manual reset:
Clears buffer, counters, and interlock states

Network 12: Reset handling (1.1 / 2.1)

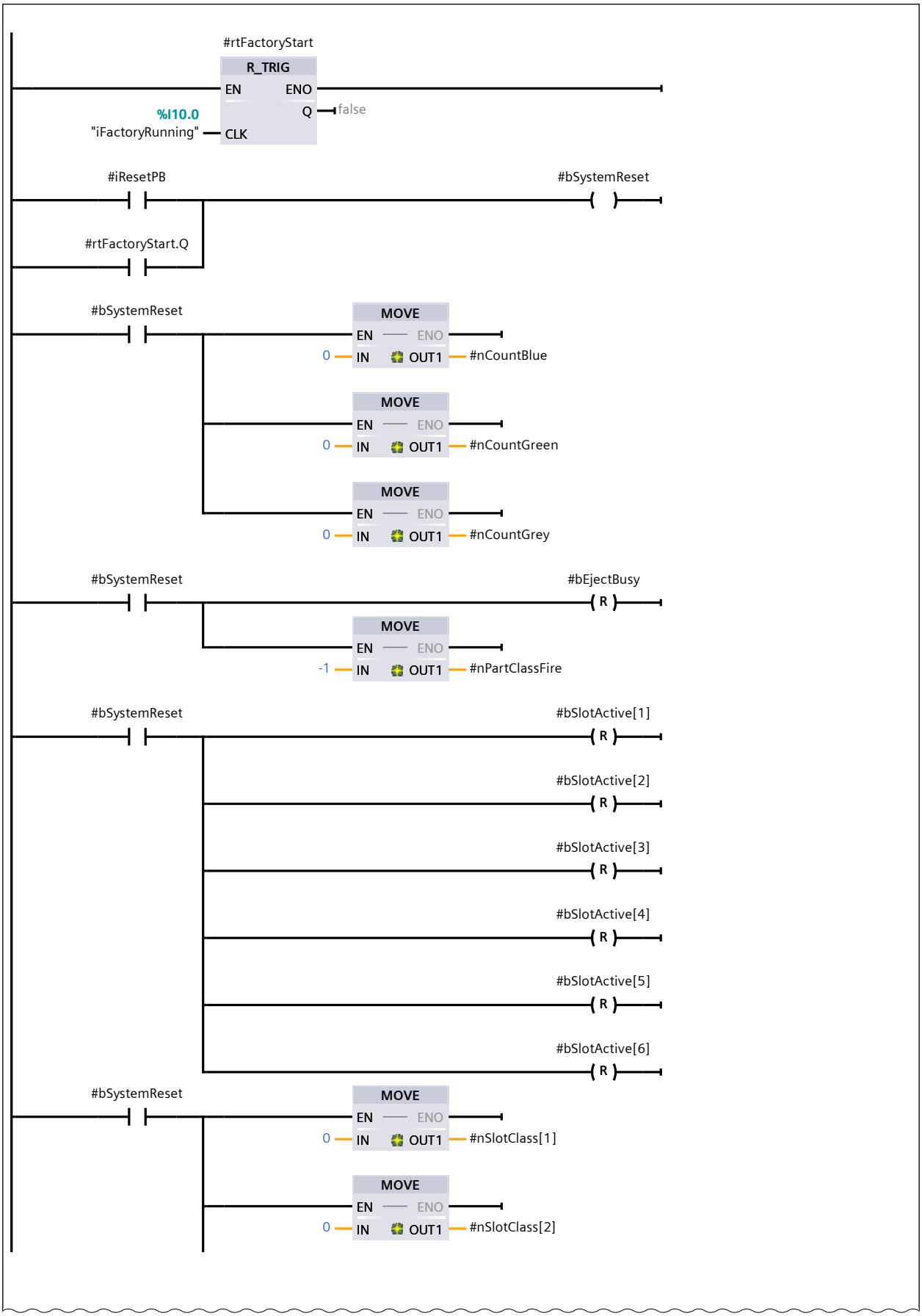

Network 12: Reset handling (2.1 / 2.1)
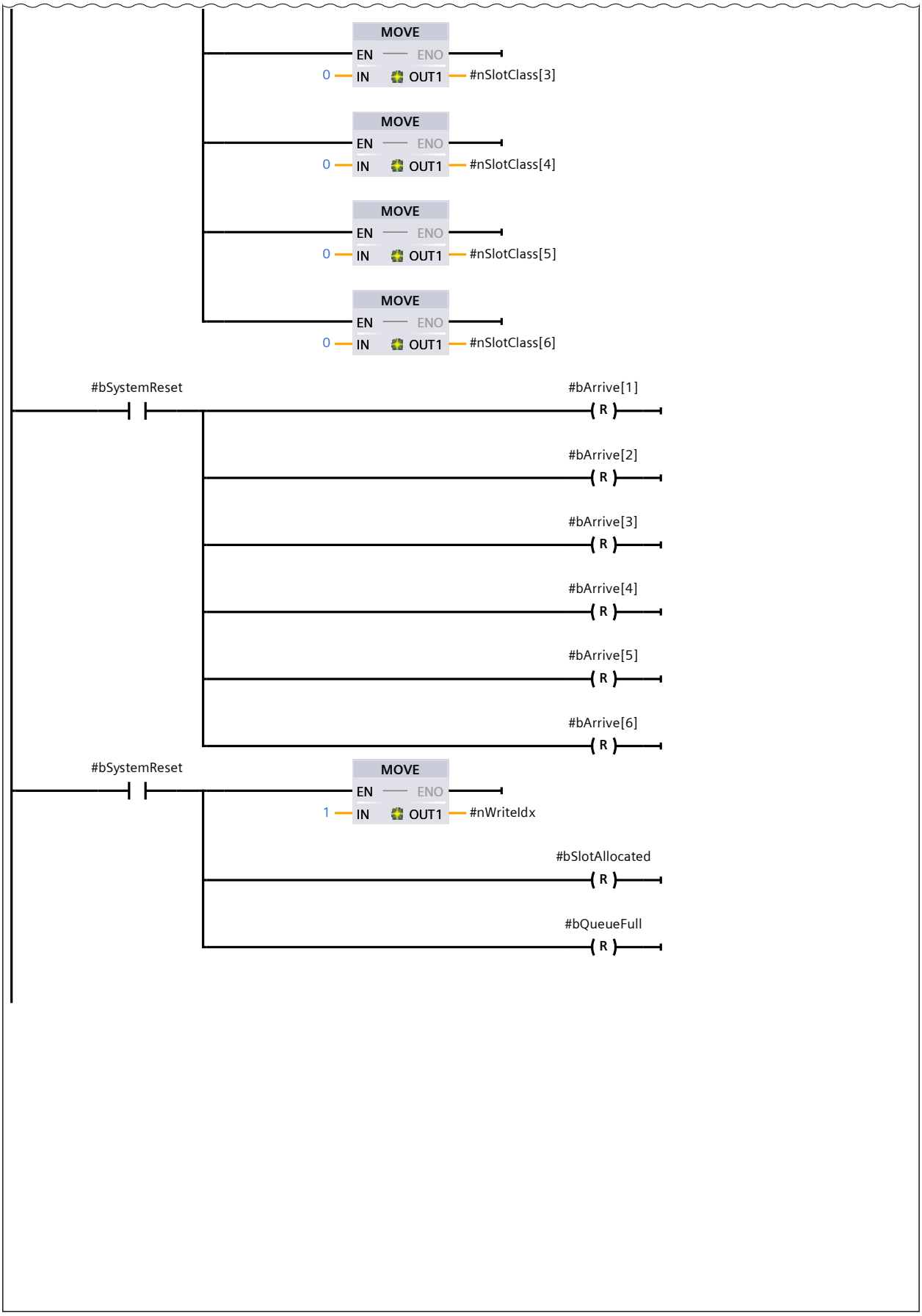
1.1 (Page1 - 24)